Metric Idler Bearings

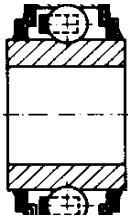

Part No.	Bore	Outside Diameter	Thickness	Dynamic Load N	Static Load N	Weight kg
203 KRR2	16	40	18.3	9,600	4,720	0.07
204 KRR	20	47	17.7	12,800	6,600	0.12
205 KRR	25	52	21	14,000	7,800	0.16

Flat Top Chain Sprockets

DIN 8153 / ISO 4348

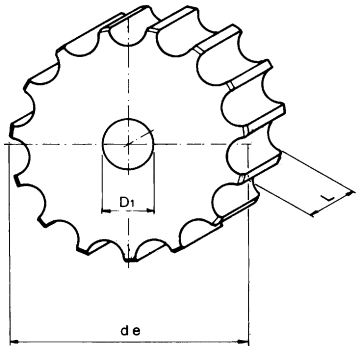

1-1/2" (38.1mm) Pitch to DIN 8153

Material: C1030

Part No.	Teeth	de	D_1 ±1 mm	L ±0.5 mm
8153A13	13	78.98	15	43
8153A15	15	93.67	16	43
8153A17	17	105.47	16	43
8153A19	19	117.34	16	43
8153A21	21	129.26	20	43
8153A23	23	141.22	20	43
8153A25	25	153.21	20	43
8153A27	27	165.20	20	43
8153A29	29	177.24	20	43
8153A31	31	189.28	20	43

Note: Flat top chain available.